10 - 60 V_{DC} ICAO Low-intensity, Type A Obstacle Light

Key features
- Based on LED-technology
- Extremely reliable - long lifetime
- Suitable for off-shore use
- Very low power consumption
- Wide 10 to 60 VDC input voltage
- Stabilised light output
- Lightweight and small – low wind load factor
- Easy to install, several mounting sets available
- Two cable glands, easy to chain without external terminal boxes
- No RF-radiations
- Five (5) years warranty
- Patented

Obelux LI-10-DCW-F LED obstacle light

Benefits
- Long maintenance intervals
- Low energy cost
- Supply power voltage variations do not affect to light output
- Very low total lifetime costs
- Low wind load

Specifications met
- ICAO International Standards and Recommended Practices:
  Aerodromes - Annex 14 Volume 1, 5th Edition, July 2009,
  Chapter 6: Low-intensity, Type A Fixed Obstacle Light

Optical characteristics
- Intensity better than 10 cd
- Colour aviation red
- Horizontal radiation pattern 360°
- Vertical radiation pattern 15°
- LED supply current stabilised by constant current generator
- Light output degradation less than 30% after 100.000 h of operation

Electrical characteristics
- Input voltage range 10 to 60 V_{DC}
- Power consumption less than 1.5 W
- Over voltage protection

Mechanical characteristics
- Anodized marine grade aluminium body and end parts
- AISI 316 acid proof steel screws
- Colourless (clear) glass cover
- Terminal box for 1,5 - 6 mm^2 wires
- Degree of protection IP 65
- Operating temperature range –55°C to +70°C
- Height 210 mm, diameter 104 mm, weight 1.1 kg
- Wind load with MS-EV60 mounting kit @ 200 km/h less than 40 N

Options
- Mounting kits
- Photocell & Flasher: Obelux LI-10-DCW-PCFL

Order Code: **Obelux LI-10-DCW-F**

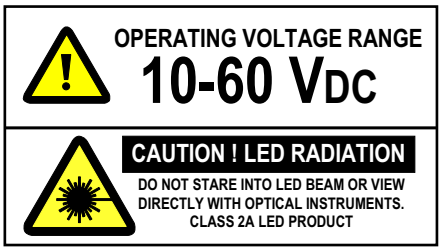

Made in Finland

Technical information in this document is subject to change without notice. Copyright © Obelux Oy 2010

Obelux Oy
Kutomotie 6 B
FI-00380 Helsinki
Finland
tel: +358 50 1999
fax: +358 9 621 5518
internet: www.obelux.com
e-mail: info@obelux.com

10 - 60 V_{DC} ICAO Low-intensity, Type A Obstacle Light

ELECTRICAL INSTALLATION INSTRUCTIONS

Obelux LI-DCW-F has two cable glands for easy chaining without external distribution boxes

Obelux LI-DCW-F is an obstacle light utilizing LED technology. The cabling and installation principles are similar to those of conventional obstacle lights.

Connection can be protected with a 6 A or 10 A fuse or with a circuit breaker (C curve).

Installation specifications
- Cable gland: M25
- Cable diameter: 11 to 17 mm
- Wire diameter: max. 6 mm^2
- Recommended cable: 3x1.5 mm^2 or 3x2.5 mm2

Options
- **CGS-20**: Smaller cable glands
  Set include 2 pcs M20 cable glands with M25-M20 adapters for 7-13 mm cables

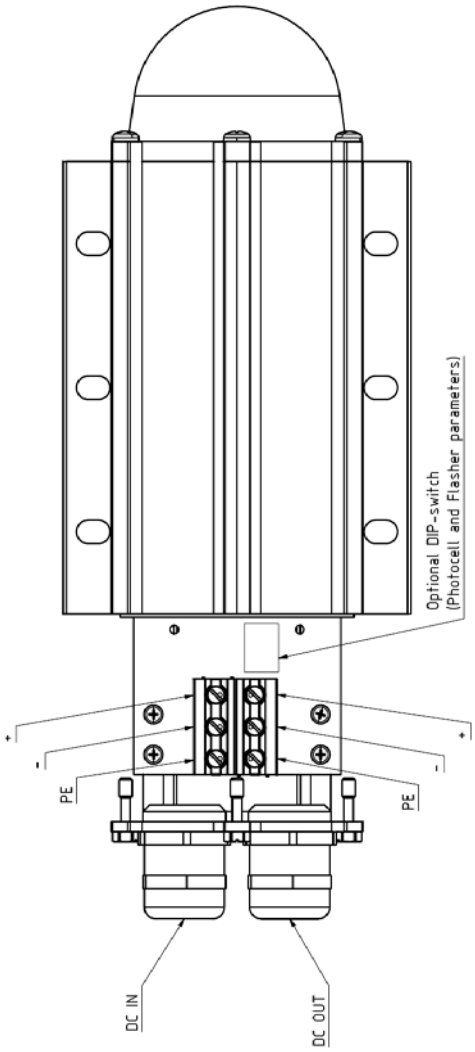

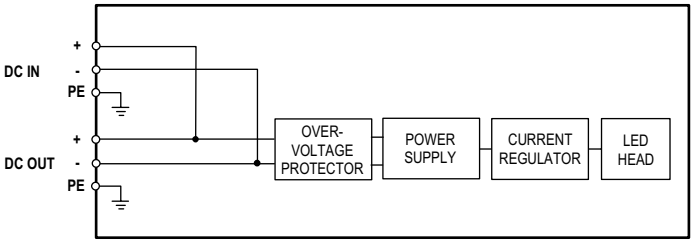

LI-10-DCW-F block diagram

Technical information in this document is subject to change without notice. Copyright © Obelux Oy 2010

Obelux Oy
Kutomotie 6 B
FI-00380 Helsinki
Finland
tel: +358 50 1999
fax: +358 9 621 5518
internet: www.obelux.com
e-mail: info@obelux.com

Mechanical dimensions

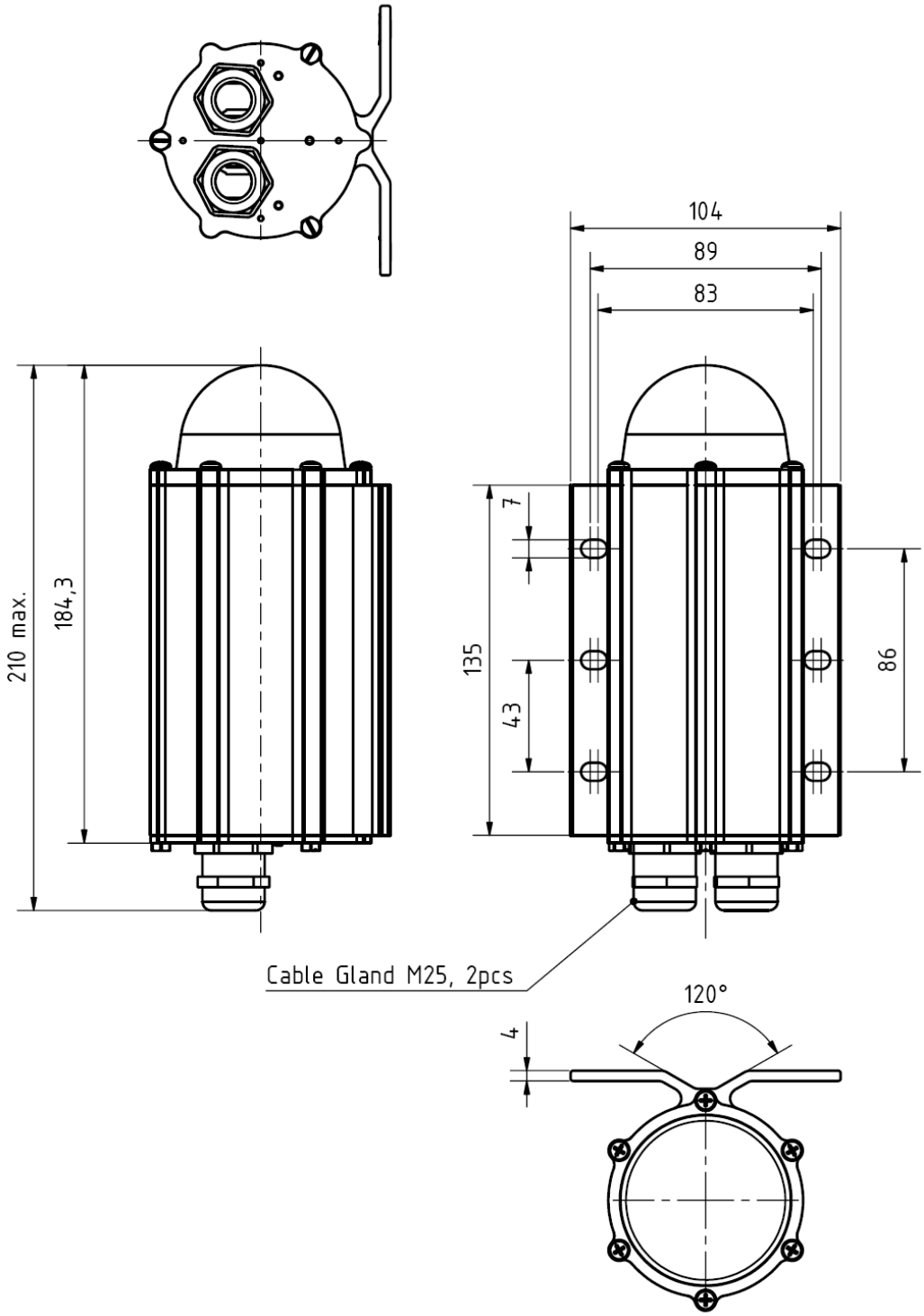

Technical information in this document is subject to change without notice. Copyright © Obelux Oy 2010

Obelux Oy
Kutomotie 6 B
FI-00380 Helsinki
Finland

tel: +358 50 1999
fax: +358 9 621 5518
internet: www.obelux.com
e-mail: info@obelux.com

There are several types of mounting sets available as option:

Obelux MS-HV80
Mounting set for 33-80 mm vertical or horizontal pipe

Mounting set include:
- 2 pcs M6 U-bolt
- 8 pcs M6 hex nut
- 4 pcs 6/12 mm washer

All parts AISI 316 acid proof steel
More detailed mechanical data: MS-HV80 datasheet

Order Code: **MS-HV80**

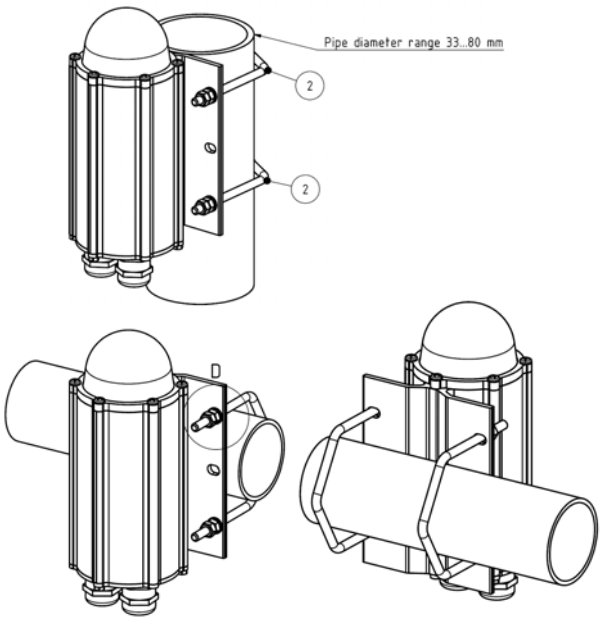

Obelux MS-EV60
Mounting set with extension plate for 30-60 mm vertical pipe installation

Mounting set include:
- 2 pcs M8 U-bolt, 8 pcs M8 hex nut
- 4 pcs M6x30 bolt, 8 pcs M6 hex nut, 4 pcs 6/12 washer
- 1 pcs extension plate

Extension plate marine grade anodized aluminium, other parts AISI 316 acid proof steel
More detailed mechanical data: MS-EV60 datasheet

Order Code: **MS-EV60**

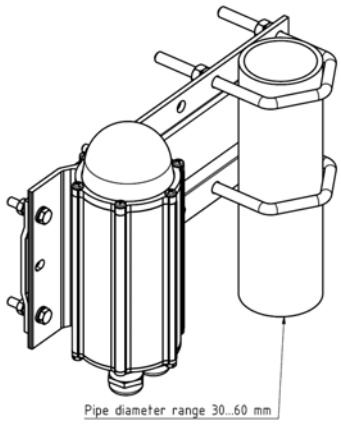

Obelux MS-EV100:
Mounting set with extension plate for 60-100 mm vertical pipe installation

Mounting set include:
- 2 pcs M8 U-bolt, 8 pcs M8 hex nut
- 4 pcs M6x30 bolt, 8 pcs M6 hex nut, 4 pcs 6/12 washer
- 1 pcs extension plate

Extension plate marine grade anodized aluminium, other parts AISI 316 acid proof steel
More detailed mechanical data: MS-EV100 datasheet

Order Code: **MS-EV100**

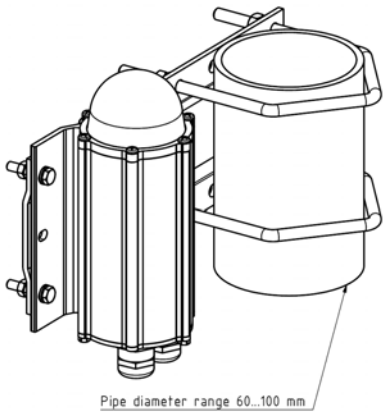

Technical information in this document is subject to change without notice. Copyright © Obelux Oy 2010

Obelux Oy
Kutomotie 6 B
FI-00380 Helsinki
Finland
tel: +358 50 1999
fax: +358 9 621 5518
internet: www.obelux.com
e-mail: info@obelux.com

Obelux MS-EV150:
Mounting set with extension plate
for 100-150 mm vertical pipe installation

Mounting set include:
- 2 pcs M8 U-bolt, 8 pcs M8 hex nut
- 4 pcs M6x30 bolt, 8 pcs M6 hex nut, 4 pcs 6/12 washer
- 1 pcs extension plate

Extension plate hot dipped galvanised steel,
other parts AISI 316 acid proof steel
More detailed mechanical data: MS-EV150 datasheet

Order Code: **MS-EV150**

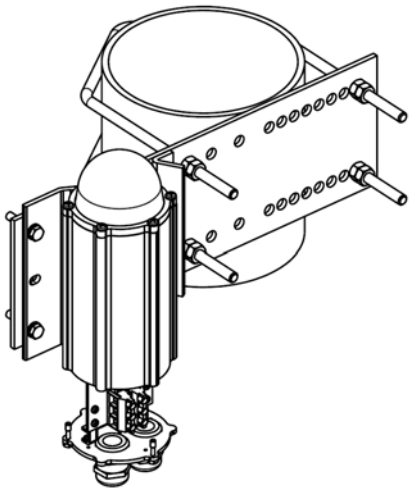

Obelux MS-DEV60:
Double mounting set with extension plate
for 30-60 mm vertical pipe installation

Mounting set include:
- 2 pcs M8 U-bolt, 8 pcs M8 hex nut
- 8 pcs M6x30 bolt, 16 pcs M6 hex nut, 8 pcs 6/12 washer
- 1 pcs extension plate

Extension plate marine grade anodised aluminium,
other parts AISI 316 acid proof steel
More detailed mechanical data: MS-DEV60 datasheet

Order Code: **MS-DEV60**

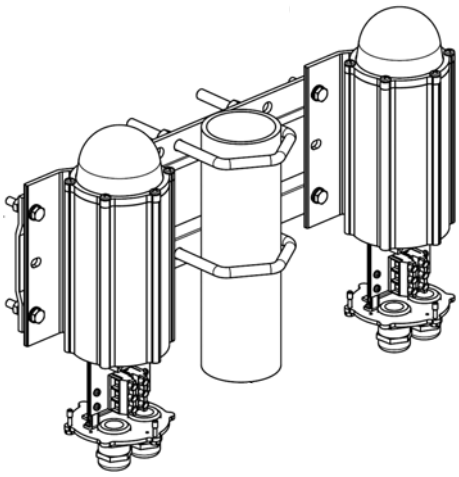

Obelux MS-DEV100:
Double mounting set with extension plate
for 60-100 mm vertical pipe installation

Mounting set include:
- 2 pcs M8 U-bolt, 8 pcs M8 hex nut
- 8 pcs M6x30 bolt, 16 pcs M6 hex nut, 8 pcs 6/12 washer
- 1 pcs extension plate

Extension plate marine grade anodised aluminium,
other parts AISI 316 acid proof steel
More detailed mechanical data: MS-DEV100 datasheet

Order Code: **MS-DEV100**

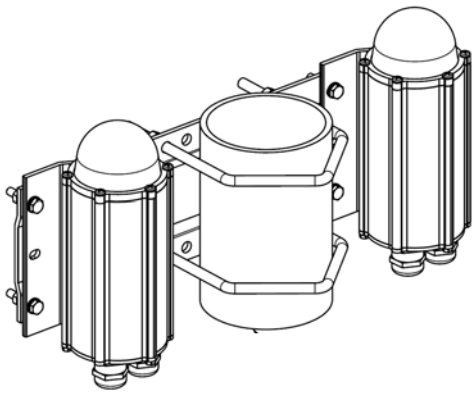

Technical information in this document is subject to change without notice. Copyright © Obelux Oy 2010

Obelux Oy
Kutomotie 6 B
FI-00380 Helsinki
Finland
tel: +358 50 1999
fax: +358 9 621 5518
internet: www.obelux.com
e-mail: info@obelux.com

Obelux MS-RW
Mounting set for horizontal plate or wall installation

Mounting set include:
- 4 pcs M6x30 bolt, 8 pcs M6 hex nut, 4 pcs 6/12 washer
- 1 pcs L-shape 2 mm plate

All parts AISI 316 acid proof steel
More detailed mechanical data: MS-RW datasheet

Order Code: **MS-RW**

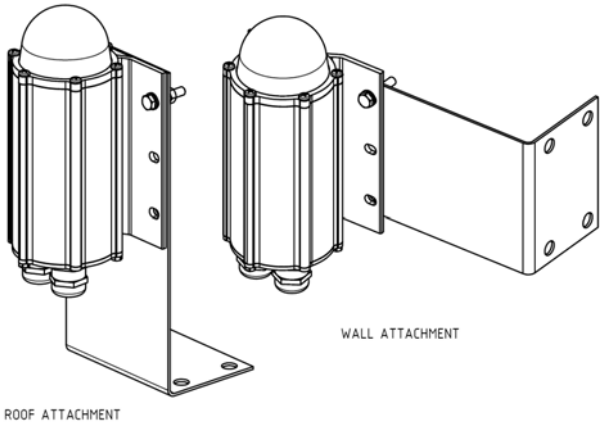

Obelux MS-LVU
Mounting set for L and V -shape profiles

Mounting set include:
- 1 set accessories for light unit fitting to plate
- 1 pcs extension plate with adjusting plate and accessories

Extension plate hot dip galvanized steel, other parts
AISI 316 acid proof steel
More detailed mechanical data: MS-LVU datasheet

Order Code: **MS-LVU** (with galvanized extension plate)
MS-LVA (with AISI 316 extension plate)

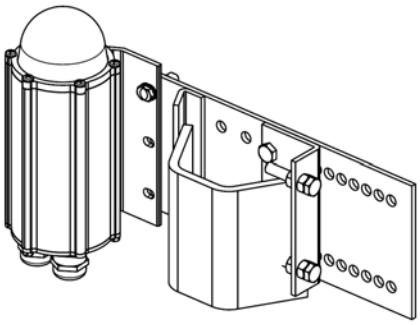

Obelux MS-N1B
Mounting set for 1" NPT at bottom
More detailed mechanical dimensions: MS-N1B dataheet

Order Code: **MS-N1B**

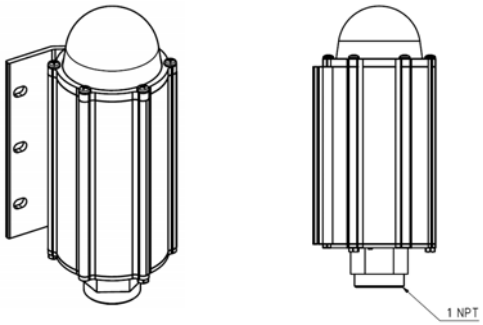

Technical information in this document is subject to change without notice. Copyright © Obelux Oy 2010

Obelux Oy
Kutomotie 6 B
FI-00380 Helsinki
Finland
tel: +358 50 1999
fax: +358 9 621 5518
internet: www.obelux.com
e-mail: info@obelux.com